THE PULSE RIFLE

These plans are in metric measurements, so if you use inches you will have to convert them. I also will not go into the basic techniques of folding aluminium as I did that in the Morita plans.
Parts list

50 mm (2 inch) wide aluminium channel 3mm wall thickness, length 650 mm
50 mm (2 inch) wide aluminium channel 3mm wall thickness, length 300 mm
12.5 mm (1/2 inch) tube, 20 cm long
40 -50 mm tube (for your IR barrel depending on what size you want)
Aluminium sheet 1-1.2 mm thick about 1 metre²
Aluminium bar 12.5 mm wide 3 mm thick and about 150 mm long
4 mm screws
Rivets
Paint, filler

First cut a piece of sheet 300 mm by 154 mm and score two lines in 50 mm from both sides (so as to leave the centre section 54 mm wide, fold along the score lines. Attach this to the rear of the 650 mm channel, like so, the idea is to fit it so it holds the other piece of channel snugly.

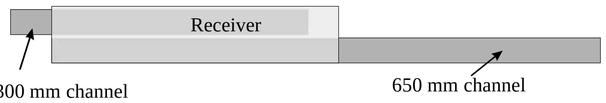

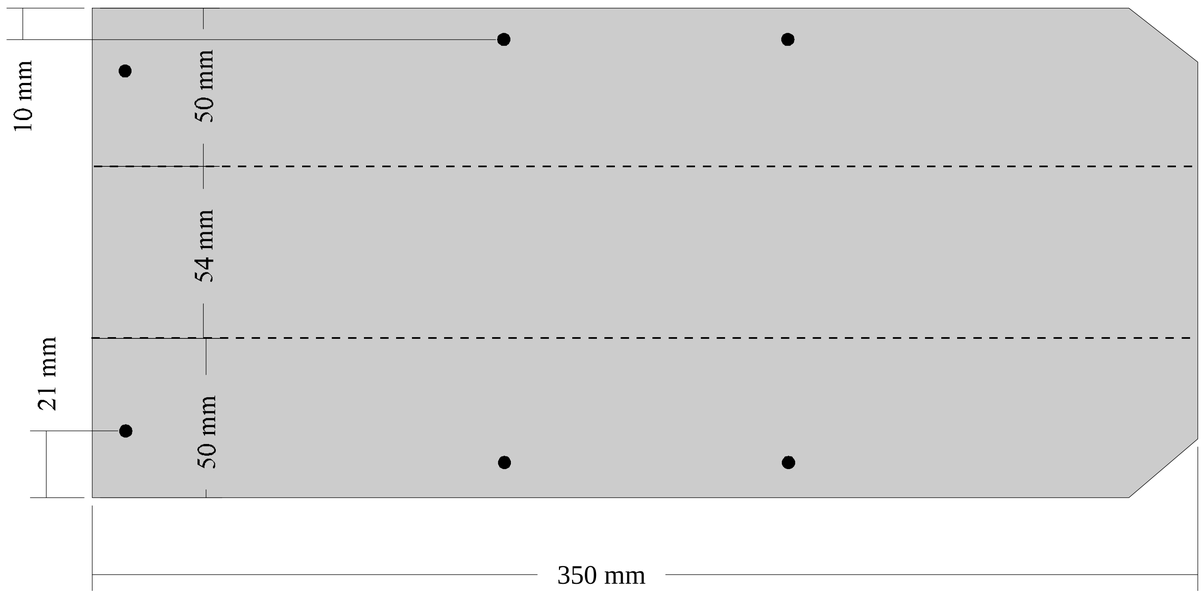

Next make the front of the gun, the plan is below, this peice should be curved around a piece of 50mm tube in the middle until its cross section is an even U shape. This is fixed at the front of the gun, leaving 5mm protruding from the top of the channel, like this

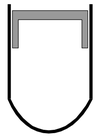

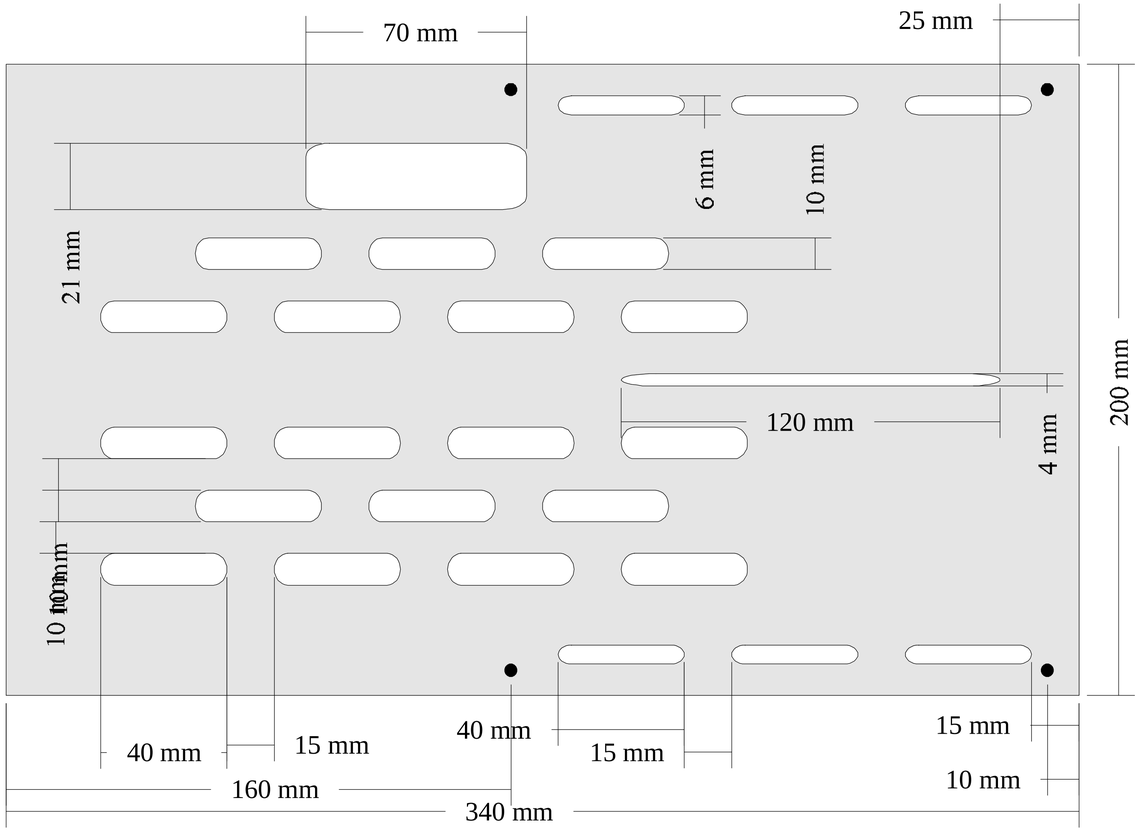

You will also need to read the Morita plans to make sense of some of this. They can be obtained by emailing me at priest@uscmblackwatch.freeserve.co.uk or very soon at the website htttp://www.uscmblackwatch.freeserve.co.uk/morita.zip

You should have something that looks like the diagram below. The next step is to make the magazine housing. I used a magazine release mechanism from a toy gun to make mine removable, so unless you have something similar lying around I would just build it as a sealed unit with a plate on the bottom of the magazine. Once the mag is cut and shaped it should be fixed to the gun 25cm from the back of the gun to the back of the magazine. You will need to fit a plate to the front of the magazine, use a piece of card to make a template then rivet the alu one to the tabs on the magazine, it will have to be curved at the top to fit snugly around the front of the gun.

Once this is complete you are ready to fit your gun grip. I used the grip off a WOW starlyte pistol as that was all I had at the time. I cut the gun 15 cm from the back of the battery compartment, this leaves the screw in front of the trigger still in place (it helps keep the grip together). This should be fitted flush with the back of the magazine.

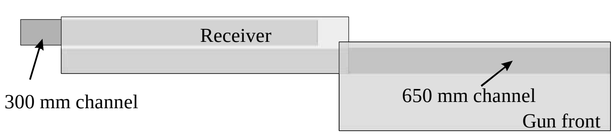

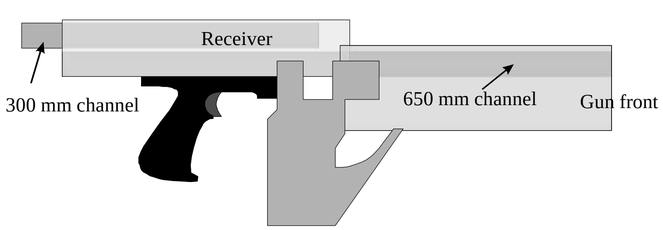

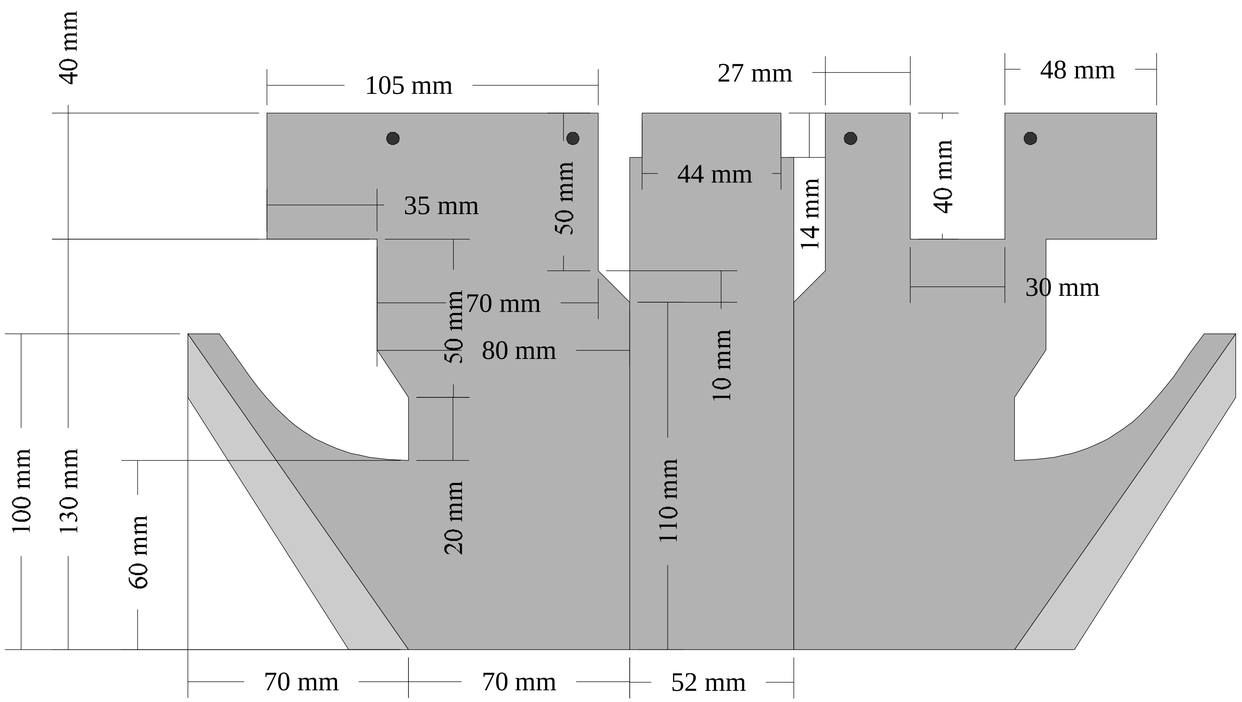

The next piece to make is the carry handle. This is a difficult bit to make. Cut out the basic shape then drill some holes in the interior cutouts, use these holes to fit a jigsaw blade in and jigsaw out the interior bits. Fold along the dotted lines at the bottom edges of the carry handle first then fold the ones in the middle. Keep test fitting it to the rest of the gun and make it symmetrical on each side. This screws onto the main gun body at the back. You will also need to fit plates to the front and back of the carry handle. Note- I built a 6 'C' cell rechargeable pack and fitted it into the top of the carry handle, it makes the gun better balanced. The raised bit at the back of the carry handle I made by screwing a small block of wood to the back from inside the handle, I then applied filler around it to smooth it out and blend it into the rest, this was then sanded back giving a seamless finish.

The other two plans on this sheet are for the pump and the back of the stock.

The pump is made by folding the 30 mm tabs back flat with the rest, to give double thickness at the edges. It is then curved around the front of the gun to give a neat fit. This will take some fine tuning to get the right tension as you don't want it too tight or the pump won't slide. It is held in place on the gun by two screws. These go into a small piece of tube an are held on with nuts. You will also have to adjust the tightness of these two screws as well. Once you have them adjusted properly (when the gun is completed and otherwise fully working) use some threadlock to stop them coming loose. Fit a switch inside so that it is activated when the pump is in the fully back position, use this to trigger whatever pump circuitry you wish. I fitted the grenade trigger at the front of the magazine (where its located on the film version)

The stock piece is cut and folded then riveted to the back of the 300 mm channel on the inside like this.

Nearly there now. Now you need to make a spring mechanism to hold the stock in position. You need a bolt 35 mm long and 5-6 mm wide, several nuts and a suitable size washer. Drill a hole big enough for the bolt to fit through easily, located 50 mm from the back of the gun in the centre, go straight through the channel and the receiver. Make a tab (ie something that you can pull the bolt with from the head and fix it in place with a nut, pass through the hole in the channel and fit a spring over the bolt with a washer and nut on top to hold it in place. Like this-

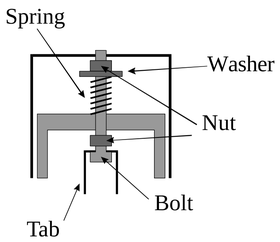

There are only a few bits more to do, one of them is the muzzle flash barrel (where the rounds come out on the film version), you use the 12.5 mm tube, cut two lengths one 195 mm the other 30 mm. Make a little arch the width of the gun and 30 mm high out of the aluminium bar, bolt this to the front of the gun. Bolt the longer piece of tube to the arch leaving 15 mm protruding from the front. Use another 35 mm bolt to hold the back end of the tube up. Take the 30 mm bit of tube and cut it lengthways on one side, slide it over the longer piece of tube at the front, above the arch.

Cover the pump action with a layer of high density closed cell foam (called plastazote over here). Using the tip of an old soldering iron bit make lines in the foam to give it that 'ribbed' look. The same can be done to the stock at the back.

Now you have to cover the barrel with a plate, make a mockup out of card first to get the sizing right then make one out of aluminium, it looks like this-

Make a plate to cover the bottom of the magazine. Drill holes in the stock to match the hole with the spring/bolt at the appropriate distances to make it comfortable. Every hole you put in is a different position for the stock (don't forget the hole for the stock in the fully retracted posistion).

Now all you have to do is fit all the electronics / fittings to turn it into a working gun. The shell will except a barrel up to 2 inch. Fit the speaker (a 3 inch square mylar speaker rated at 5 W is a good choice) in the magazine housing (drill some holes in front of where you fit the speaker to let the sound out). I fitted a separate barrel for the grenade action under the arch, recessed slightly where its hard to see. A 10 mm hyperbright red LED fitted into the muzzle flash barrel will make an excellent muzzle flash.

Fit plates over any gaps in the ends of the shell using the method described in the morita plans. Two last bits of detailing are two small plates fitted to the carry handle shaped like this and fitted to the sides of the carry handle just in front of the magazine housing.
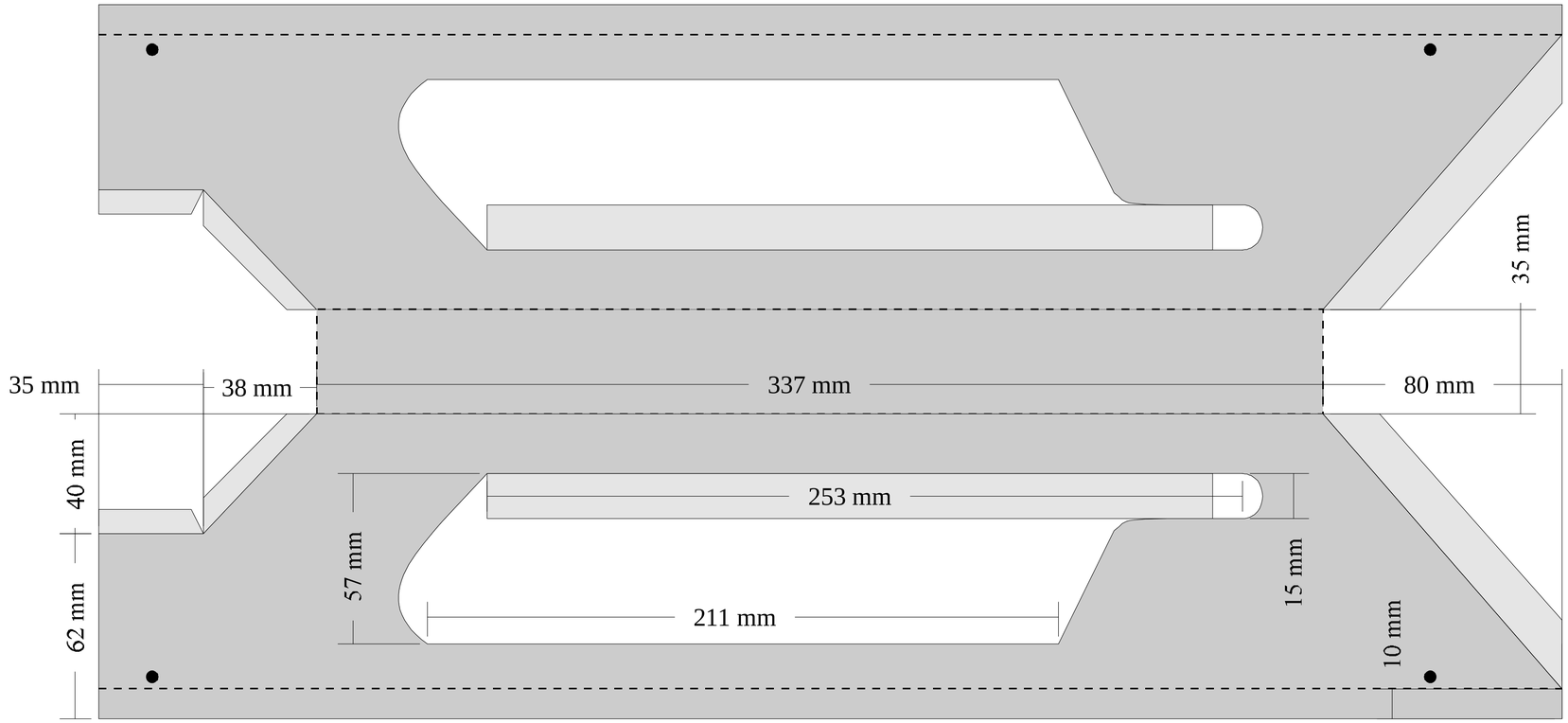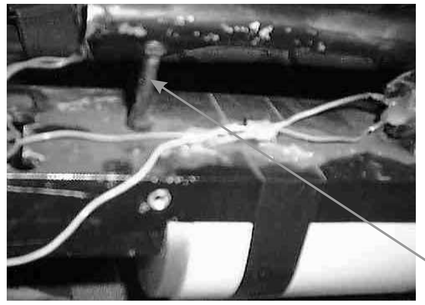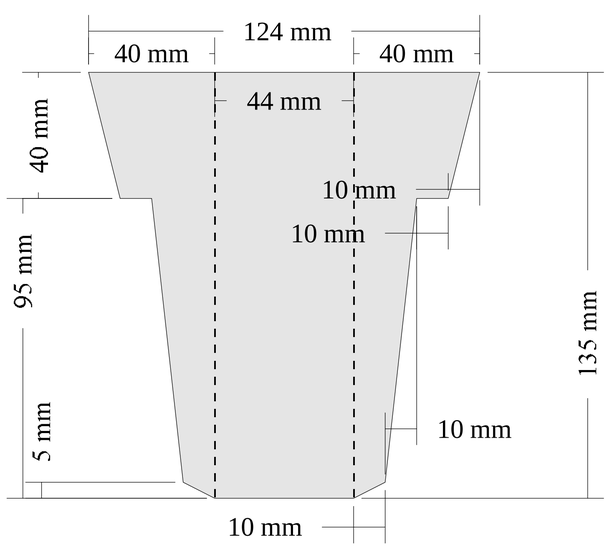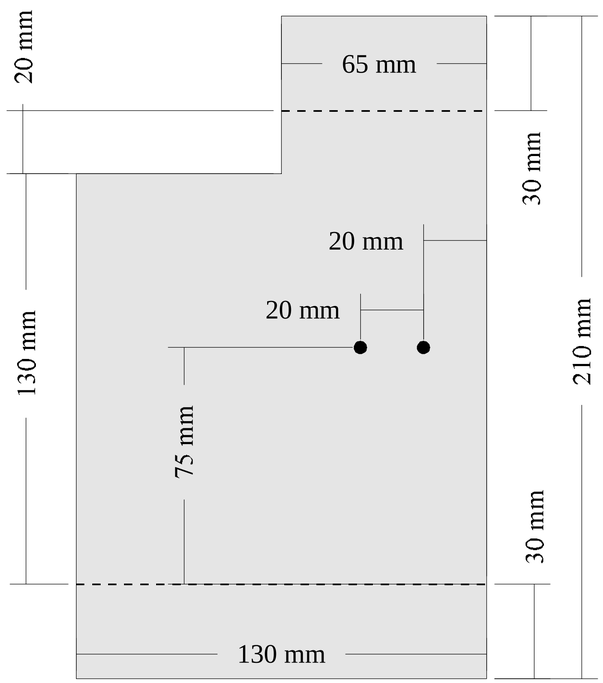
A small piece of red filter fitted into the magazine and another small detailing plate over the area comletes the magazine display area.